XD SERIES HOSE REELS

30 / 30 HN

HIGH CAPACITY REEL

Used in applications requiring longer-range dispense and higher capacity than the standard XDX 20 series. Ideal for use on mobile service trucks, heavy construction and industrial plants.



Optional Adjustable Arm

- Easily change to one of seven arm positions to fit your application.
- Order with arm (HS models) or without (HN models).

Full-Flow Swivel

Maximize material flow with minimal pressure drop for faster fills to get more vehicles through your shop.

Spring Adjustment

Increase or decrease spring tension while reel is pressurized with fluid.

Large Hose Capacity with Small Profile

Compact pedestal and spool fits into tight spaces and can accommodate 30-75 foot (9.1-22.8 meters) hose capacity for a wide variety of applications.

Durable Finish

Baked-on enamel finish (four colors available) protects reel from corrosion.

TYPICAL APPLICATIONS

- Heavy-duty truck dealers
- Fleet maintenance
- Mining maintenance
- Public works garage
- Construction vehicle maintenance
- Heavy-duty mobile service trucks
- Mining
- Lube trucks

TYPICAL FLUIDS

- Petroleum- and synthetic-based oils (motor, gear and ATF)
- Diesel fuel
- Air
- Water
- Grease
- Antifreeze
- Windshield washer fluid
- Pressure wash
- Waste oil evacuation
- Diesel exhaust fluid (DEF)

TECHNICAL SPECIFICATIONS

Operating Temperature Range	
Air/Water/Antifreeze/Windshield Washer Fluid	-40°F to 180°F (-40°C to 82°C)
Oil	-40°F to 180°F (-40°C to 82°C)
Grease	-40°F to 180°F (-40°C to 82°C)
Pressure Wash	-20°F to 225°F (-28°C to 107°C)
Fuel/Evacuation	-40°F to 120°F (-40°C to 49°C)
Diesel Exhaust Fluid (DEF)	12°F to 140°F (-11°C to 60°C)
Wetted Parts (Bare Reel Only)	
Air/Water/Antifreeze/Windshield Washer Fluid	Nickel plated carbon steel, aluminum, Buna-N rubber, UHMWPE
Oil	Nickel plated carbon steel, aluminum, Buna-N rubber, UHMWPE
Grease	Nickel plated stainless steel, Buna-N rubber, UHMWPE
Pressure Wash	Nickel plated stainless steel, Buna-N rubber, UHMWPE
Fuel/Evacuation	Nickel plated carbon steel, aluminum, Buna-N rubber, UHMWPE
Diesel Exhaust Fluid (DEF)	Zinc plated steel, polyurethane, steel
Weight (Without Hose)	98 lb (44.5 kg)
Sound Pressure Level	85.8 dB(A)
Sound Power Level	94.9 dB(A)
Instruction Manual	3A0138
Wetted Parts	Carbon steel, nickel plated cast iron, Buna-N rubber, FKM UHMWPE
Maximum Recommended Mounting Height	15 ft (4.6 m)
Sound Pressure Level	77.6 dB(A)
Sound Power Level	86.8 dB(A)

INDONESIA POWER ENERGI

XD SERIES HOSE REELS

30 / 30 HN

DIMENSIONS

	HS Models (with Adjustable Arm)	HN Models (without Arm)
A	9.0 in (229 mm)	7.5 in (196 mm)
B	21.5 in (546 mm)	18.1 in (460 mm)
C	26.0 in (659 mm)	23.4 in (594 mm)
D	22.1 in (562 mm)	20.0 in (508 mm)
E	23.1 in (588 mm)	21.0 in (533 mm)
F	27.6 in (701 mm)	25.2 in (640 mm)

HS Models

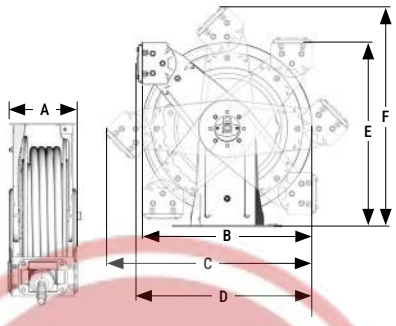

HN Models

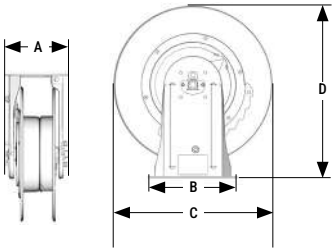

TYPICAL MOUNTING CONFIGURATIONS

Overhead Mount

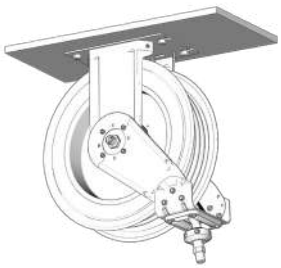

Wall Mount

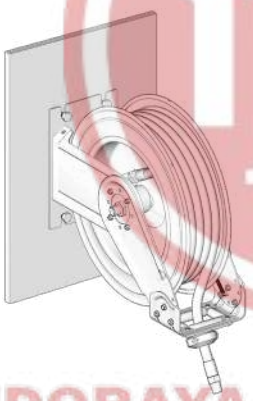

Bench/ Truck Mount

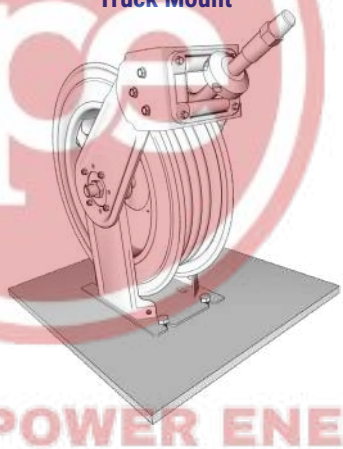

Truck Mount with Remote Mounted Roller Guide

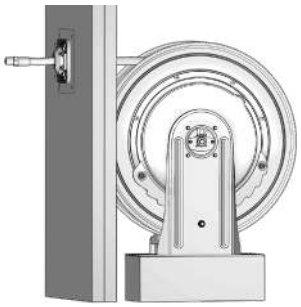

INDORAYA POWER ENERGI

Metallic Blue (B)
Standard In-Stock Color



Available in 3 COLORS
Consult factory for lead times

Yellow (F)



Black (D)



ORDERING OPTIONS

XD 30 Reel Assembly Ordering Guide

XD Series reels are available in three colors. Use the chart below to determine the correct part number to order. The last character of each part number indicates the hose reel color.

Reel Color	Identifier
Metallic Blue	B
Yellow	F
Black*	D

*Black not available in HN models

ORDER EXAMPLE: Arm in overhead mount position, XD 30, oil, 3/4 in ID hose, 50 ft hose length

1 **Select your reel position:** HSMD5#

2 **Select your reel color:** (from Reel Assembly Ordering Guide – opposite) Metallic Blue = "B"



Order Part Number: HSMD5B

HS MODELS (WITH ADJUSTABLE ARM)

REEL ASSEMBLIES

Assembly includes hose, ball stop kit and roller guide. **Required hose inlet kit sold separately.**



Fluid	Hose (Included)		Connection Size		Maximum Pressure psi (bar)	Reel, Hose and Ball Stop Assembly Part Number	Recommended Hose Inlet Kit
	ID in (mm)	Length ft (m)	Inlet	Outlet			
Air/Water/Antifreeze/ Windshield Washer Fluid	1/2 (13)	75 (23)	1/2 NPSM(M)	1/2 NPT(M)	300 (20.7)	HSLC8#	218549
	3/4 (19)	50 (15)	3/4 NPSM(M)	3/4 NPT(M)	300 (20.7)	HSLD5#	24E284
Oil	1/2 (13)	75 (23)	1/2 NPSM(M)	1/2 NPT(M)	1,500 (103)	HSMC8#	218549
	3/4 (19)	50 (15)	3/4 NPSM(M)	3/4 NPT(M)	1,250 (86)	HSMD5#	24E284
Grease	1/2 (13)	50 (15)	1/2 NPSM(M)	1/2 NPT(M)	5,000 (345)	HSHC5#	24E283
	3/8 (10)	75 (23)	1/2 NPSM(M)	3/8 NPT(F)	5,000 (345)	HSHB7#	24E283
Pressure Wash	3/8 (10)	75 (23)	1/2 NPSM(M)	3/8 NPT(M)	4,000 (276)	HSPB8#	24E283
DEF	3/4 (19)	50 (15)	3/4 BSPP(M)	3/4 BSPP ORB	50 (3.4)	HSDD5#	24W250 (BSPP)

BARE REELS

Required hose inlet kit sold separately.



Fluid	Hose (Not Included)		Connection Size		Maximum Pressure psi (bar)	Part Number	Recommended Hose Inlet Kit
	ID in (mm)	Length ft (m)	Inlet in (mm)	Outlet in (mm)			
Oil	1/2 (13)	75 (23)	1/2 (13) (m)	1/2 (13) (m)	2,000 (138)	HSMCF#	218549
	3/4 (19)	50 (15)	3/4 (19) (m)	3/4 (19) (m)	2,000 (138)	HSMDD#	24E284
Grease	1/2 (13)	50 (15)	1/2 (13) (m)	1/2 (13) (m)	5,000 (345)	HSHCD#	24E283
Pressure Wash	3/8 (10)	75 (23)	1/2 (13) (m)	3/8 (10) (m)	4,000 (276)	HSHFF#	24E283
DEF	3/4 (19)	50 (15)	3/4 (19) (m)	3/4 (19) ORB	50 (3.4)	HSDDD#	24W250 (BSPP)
Fuel/Oil Evacuation	1 (13)	30 (9)	3/4 (19) (m)	1 (13) (m)	125 (8.6)	HSLEE#	24E285

INDORAMA POWER ENERGI

XD SERIES HOSE REELS

30 / 30 HN

ORDERING OPTIONS

HN MODELS (WITHOUT ADJUSTABLE ARM)

REELS WITH HOSE

Required hose inlet kit sold separately.



Fluid	Hose (Included)		Connection Size		Maximum Pressure psi (bar)	Reel and Hose Assembly Part Number	Recommended Hose Inlet Kit
	ID in (mm)	Length ft (m)	Inlet	Outlet			
Air/Water/Antifreeze/ Windshield Washer Fluid	1/2 (13)	75 (23)	1/2 NPSM(M)	1/2 NPT(M)	300 (20.7)	HNLC8#	218549
	3/4 (19)	50 (15)	3/4 NPSM(M)	3/4 NPT(M)	300 (20.7)	HNLD5#	24E284
Oil	1/2 (13)	75 (23)	1/2 NPSM(M)	1/2 NPT(M)	1,500 (103)	HNMC8#	218549
	3/4 (19)	50 (15)	3/4 NPSM(M)	3/4 NPT(M)	1,250 (86)	HNMD5#	24E284
Grease	3/8 (10)	75 (23)	1/2 NPSM(M)	3/8 NPT(F)	5,000 (345)	HNHB7#	24E283
Pressure Wash	3/8 (10)	75 (23)	1/2 NPSM(M)	3/8 NPT(M)	4,000 (276)	HNPB8#	24E283
	1/2 (13)	50 (15)	1/2 NPSM(M)	1/2 NPT(M)	4,500 (310)	HNPC5#	24E283

BARE REELS

Required hose inlet kit sold separately.



Fluid	Hose (Not Included)		Connection Size		Maximum Pressure psi (bar)	Part Number	Recommended Hose Inlet Kit
	ID in (mm)	Length ft (m)	Inlet in (mm)	Outlet in (mm)			
Oil	3/4 (19)	50 (15)	3/4 (19) (m)	3/4 (19) (m)	2,000 (138)	HNMDD#	24E284
Grease	1/2 (13)	50 (15)	1/2 (13) (m)	1/2 (13) (m)	5,000 (345)	HNHCD#	24E283
Pressure Wash	3/8 (10)	75 (23)	1/2 (13) (m)	3/8 (10) (m)	4,000 (276)	HNHFF#	24E283

BALL STOP KITS

XD HS models include ball stop kits. Order separately if ordering a bare reel or if needed with HN models.



Part Number	Description
222225	For 1/4 in (6 mm) ID hose (not compatible with XD 30, 700 or 750)
218340	For 1/4-3/8 in (6-10 mm) ID hose (not for use with XD 30, 700 or 750)
218341	0.782 in ID used for 3/8 in and 1/2 in (10 mm and 13 mm) hose (not compatible with XD 30, 700 or 750)
237872	1.0 in ID used for 5/8 in (16 mm) hose
237873	1.123 in ID used for 3/4 in (19 mm) hose
237874	1.374 in ID used for 1 in (25 mm) hose
24D132	For 3/8 in (10 mm) ID hose
24D133	For 1/2 in (13 mm) ID hose

INDORAYA POWER ENERGI

XD SERIES HOSE REEL ACCESSORIES

30 / 30 HN

ORDERING OPTIONS

HOSE INLET KITS

A hose inlet kit is required when ordering an XD reel.



Part Number	Description
218549	1/2 in (13 mm) hose inlet kit for air/water and oil. 2,000 psi (137 bar), 1/2 in NPT hose inlet ID, 24 in (610 mm) long
24E284	3/4 in (19 mm) hose inlet kit for air/water and oil. 1,250 psi (86 bar), 3/4 in NPT hose inlet ID, 24 in (610 mm) long
24E283	1/2 in (13 mm) hose inlet kit for grease or pressure wash. 5,000 psi (345 bar), 1/2 in NPT hose inlet ID, 24 in (610 mm) long
24E285	1/2 in (13 mm) hose inlet kit for fuel. 125 psi (8.6 bar), 1/4 in NPT hose inlet ID, 24 in (610 mm) long
24W250	2 ft DEF inlet hose kit for XD 30 reels. 3/4 in BSPP(F) x cut end and 90° elbow
24W251	6 ft DEF inlet hose kit for XD 30 reels. 3/4 in BSPP(F) x cut end and 90° elbow
124875	2 ft DEF hose, 3/4 in BSPP(M) x cut end (inlet hose)
124581	6 ft DEF hose, 3/4 in BSPP(M) x cut end (inlet hose)

VALVE HANGER KIT



Part Number	Description
224444	Mounts to side of reel to allow hanging of non-metered and high-flow dispensing valves

SELF-ADHESIVE IDENTIFICATION LABEL SET



Part Number	Description
180698	Set includes: 1 in x 5 in (25.4 mm x 127 mm) hose reels labels for Antifreeze, Water, SAE 5-40, SAE 10-40, SAE 20W, Hydraulic, Gear, SAE 10W, SAE 10-30, SAE 30W, Dexron, Air, Chassis, ATF

INDORAYA POWER ENERGI