Corken Innovation, Quality, and Service in a Vane Pump

CORKEN®

INDUSTRIAL VANE PUMP



Understanding the Corken Differences Will Make a Big Difference

You know what to expect from Corken pumps, and that's what you get with the newest addition to Corken's line — the Industrial Vane Pump.

The vane pumping principle fills a definite need in industrial applications involving thin liquids. Corken's Vane Pump fills that need better — providing you with more features and less maintenance.

What's the Difference? See for Yourself.

Compare Corken Vane Pumps with other vane pumps available. Feature-for-feature, Corken Vane Pumps will make a big difference, performance-wise, in your application.

- Removable pump casing liners in all models dramatically reduce your pump replacement costs. Worn liners can be replaced quickly without rebuilding the pump.
- Corken Vane Pumps incorporate roller bearings rather than ball bearings which require locked rotors found on other vane pumps. This one feature alone eliminates field adjustments of the rotor.
- Reversible end plates double their service life.
- Seal maintenance is easy with Corken Vane Pumps. Simply remove four bolts to remove bearings and seals.
- Larger diameter composite push rods eliminate potential vane damage and extends vane life.

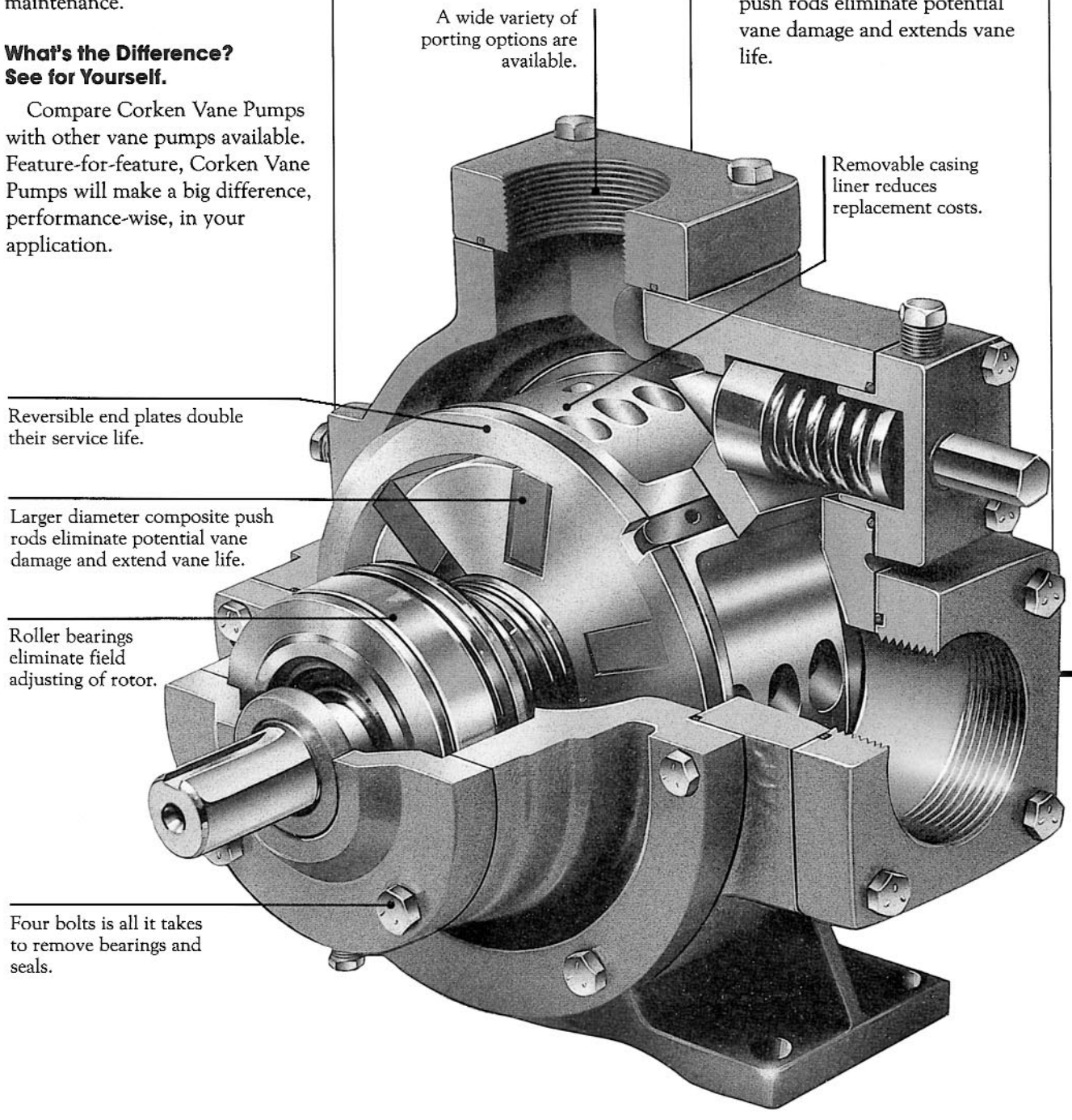

e in Your Vane Pump Applications.

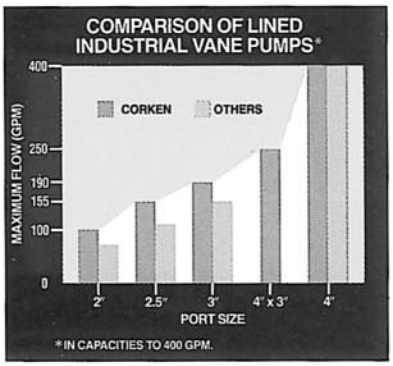

Good News for Vane Pump Applications

Corken expands its product line to meet industry's needs with the introduction of a line of vane pumps designed for industrial applications.

Corken Vane Pumps are designed for applications involving alcohols, freons, fuel oils, acetone, light oils, and other thin liquids. They operate up to 950 RPM at pressures ranging to 125 PSI and temperatures from –25° F to +225° F. These specifications make Corken Vane Pumps ideal for chemical processing, food processing, petroleum, and other industries.

The Corken Vane Pump fills the needs of industrial applications involving thin liquids better than other vane pumps on the market. And that's good news if you have a thin liquid fluid handling application!

SPEEDS:
to 950 RPM

NOMINAL FLOWS:
to 400 GPM

PRESSURES:
to 125 PSI

TEMPERATURE:
to 225° F.

A Better Vane Pump for Industrial Applications

Corken Vane Pumps are designed specifically for thin liquid fluid handling situations in industrial applications. Additional design features that enhance the efficiency of the pump include the following:

- The Corken Vane Pump can operate at higher speeds reducing pumping cost per gallon.
- Corken Vane Pumps are available with integral gear reducers requiring less space and lower initial cost.
- A large variety of porting options, including flanged ports meeting ANSI standards on ductile iron models, give design flexibility.

Best of All, It's a Corken

With the introduction of the Industrial Vane Pump, Corken continues to be an innovator in fluid handling—solving your fluid handling problems through the design and manufacture of top-quality, low-maintenance, built-to-last pumps.

Even better, Corken is an innovator in service with preventive maintenance seminars, off-the-shelf sales from a worldwide network of distributors and individualized engineering support.

If your fluid handling application calls for a vane pump, call your Corken distributor to see the difference the Corken Vane Pump will make in your fluid handling application.

LARGER DIAMETER COMPOSITE PUSH RODS

Other vane pump manufacturers use small diameter steel push rods that tend to drive into the vane and can eventually damage the

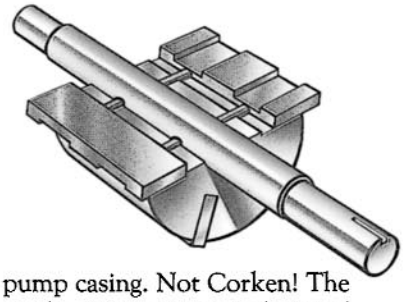

pump casing. Not Corken! The Corken Vane Pump is designed around larger composite push rods and vanes protecting the vanes and pump casing from potential damage, extending pump life and reducing downtime!

LINED PUMPS

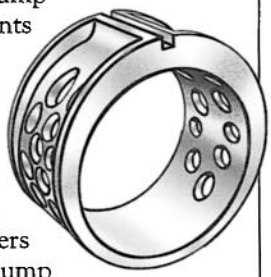

Because the pump casing represents 25 percent of the cost of the pump, all Corken Vane Pumps are designed with removable liners that line the pump casing. If this lining gets worn, it can be replaced quickly and easily without disconnecting the plumbing to the pump. With normal maintenance, you never have to discard the pump casing!

ROLLER BEARINGS

While competitive vane pump models continue to use ball-type bearings and a locked rotor, Corken incorporates roller bearings into the design of the Corken Vane Pump. This feature alone eliminates field adjusting of the rotor which simplifies maintenance and reduces service cost.

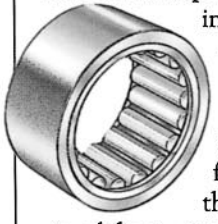

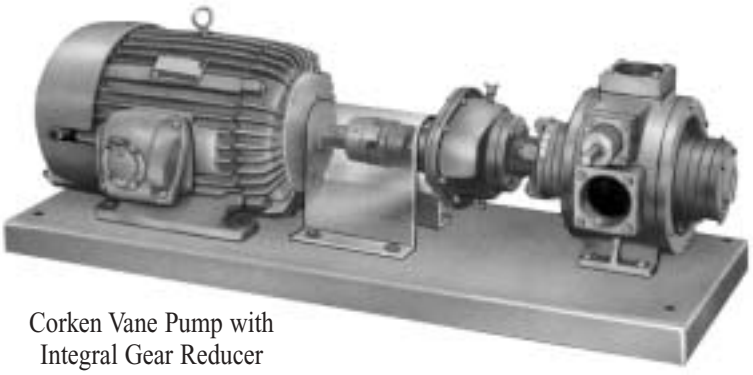

Corken Vane Pump with
Integral Gear Reducer

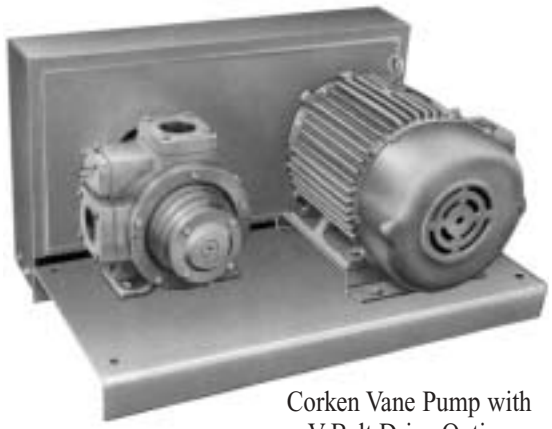

Corken Vane Pump with
V-Belt Drive Option

CONSTRUCTION — SERIES CDBN & CPBN (THREADED) AND SERIES CDBF & CPBF (FLANGED)

Pump Construction	Casing and Heads	Bearing Cap	Rotor	Shaft	Vane and Pushrods[1]	Liner and End Plates	Mechanical Seals (2 required)		Other O-rings[3]	Bearings (2 required)	Internal Relief Valve Spring
							Rotating and Stationary Parts[2]	O-rings[3]			
CDBN	Ductile Iron	Iron	Ductile Iron	Steel	Composite	Iron	Carbon vs. Ni Resist	Buna-N	Buna-N	Anti-Friction Roller	Cadmium Plated Steel
CDBF	Ductile Iron	Iron	Ductile Iron	Steel	Composite	Iron	Carbon vs. Ni Resist	Buna-N	Buna-N	Anti-Friction Roller	—[4]
CPBN	Iron	Iron	Ductile Iron	Steel	Composite	Iron	Carbon vs. Ni Resist	Buna-N	Buna-N	Anti-Friction Roller	Cadmium Plated Steel
CPBF	Ductile Iron	Iron	Ductile Iron	Steel	Composite	Iron	Carbon vs. Ni Resist	Buna-N	Buna-N	Anti-Friction Roller	—[4]

SPECIFICATIONS — SERIES CDBN & CPBN (THREADED) AND SERIES CDBF & CPBF (FLANGED)

Model Numbers		Standard Port Size (inches)		Nominal Pump Rating		Motor Horsepower Required at Rated Speed Pumping 100 SSU Liquid		Maximum Differential Pressure	Maximum Working Pressure	Maximum Recommended Temperature for Catalogued Pump	Approximate Shipping Weight Pounds
Series	Size	Inlet[5-6]	Outlet[5-6]	GPM	RPM	50 PSI	100 PSI	PSI	PISG	Degrees °F	Unmounted
CDBN	0521	2.0	2.0	100	950	7.5	15	125	400	225	120
CDBN	1021	3.0	3.0	190	780	10.0	20	125	400	225	160
CDBN	1321	4.0	3.0	255	780	15.0	25	100	400	225	185
CDBN	1521	4.0	4.0	400	780	25.0	40	100	400	225	195
CDBF	1021	3.0	2.5	190	780	10.0	20	125	400	225	200
CDBF	1321	4.0	3.0	255	780	15.0	25	100	400	225	235
CDBF	1521	4.0	3.0	400	780	25.0	40	100	400	225	235
CPBN	0521	2.0	2.0	100	950	7.5	15	125	200	225	120
CPBN	0721	2.5	2.5	155	950	7.5	15	125	200	225	135
CPBN	1021	3.0	3.0	190	780	10.0	20	125	200	225	160
CPBN	1321	4.0	3.0	255	780	15.0	25	100	200	225	185
CPBN	1521	4.0	4.0	400	780	25.0	40	100	200	225	195
CPBF	0721	3.0	2.0	155	950	7.5	15	125	200	225	165
CPBF	1021	3.0	2.5	190	780	10.0	20	125	200	225	200
CPBF	1321	4.0	3.0	255	780	15.0	25	100	200	225	
CPBF	1521	4.0	3.0	400	780	25.0	40	100	200	225	235

1 Vanes are Ryton®, pushrods are glass filled Teflon®.
2 All other seal parts are steel, optional stainless steel seat available.
3 Optional elastomers for seal and O-rings are Viton®, Teflon®, Neoprene®, Ethylene Propylene and Kalrez.
4 Internal relief valve not available in Series CDBF and CPBF ductile iron construction.
5 Series CDBN and CPBN has bolt-on flanges tapped for NPT pipe. Other sizes available.
6 Series CDBF and CPBF has port flanges suitable to use with 300# ANSI ductile iron or steel companion flanges or flanged fittings.

Ryton® is a trademark of Phillips Petroleum Company.
Viton®, Neoprene® and Teflon® are registered trademarks of the DuPont Company.

Solutions beyond products...

CORKEN®
IDEX

Corken, Inc. • A Unit of IDEX Corporation
9201 North I-35 Service Road, Oklahoma City, OK 73131 U.S.A.
(405) 946-5576 FAX (405) 948-7343
Website: www.corken.com
E-mail: cocsalesdept@corken.com

FORM - 490A
PRINTED IN THE U.S.A.
FEBRUARY 2001