Appendix B—Specifications for All CD-Series (high pressure) Models

Operating Specifications for All CD-Series Models with NPT Flanges

Model	0521/22	1021/22	1321/22	1521/22
Suction flange	2"	3"	4"	4"
Discharge flange	2"	3"	3"	4"
Maximum RPM	950	950	860	860
Minimum temperature	-25°F (-32°C)			
Maximum temperature	225°F (107°C)			
Maximum working pressure	400 psig (27.6 bar)			
Maximum differential pressure	125 psid (8.6 bar)	125 psid (8.6 bar)	100 psid (6.9 bar)	100 psid (6.9 bar)
Suction flange option	2½", 3"	2½"	No	No
Discharge flange option	2½"	2½"	4"	3"
Internal relief	Yes			
Seal seat material options	Silicon carbide			
Steel slip-on flange option	Yes (suction & discharge)			
Maximum driver hp (kW)	10 (7.5)	20 (15)	20 (15)	30 (22)

Operating Specifications for All CD-Series Models with ANSI Flanges

Model	1021/22	1321/22	1521/22
Suction flange	3" 300 lb ANSI	4" 300 lb ANSI	4" 300 lb ANSI
Discharge flange	2-1/2" 300 lb ANSI	3" 300 lb ANSI	3" 300 lb ANSI
Maximum RPM	950	860	860
Minimum temperature	-25°F (-32°C)	-25°F (-32°C)	-25°F (-32°C)
Maximum temperature	225°F (107°C)	225°F (107°C)	225°F (107°C)
Maximum working pressure	400 psig (27.6 bar)	400 psig (27.6 bar)	400 psig (27.6 bar)
Maximum differential pressure	125 psid (8.6 bar)	125 psid (8.6 bar)	100 psid (6.9 bar)
Suction or discharge flange option	No		
Internal relief	No		
Seal seat material options	Silicon carbide		
Maximum driver hp (kW)	20 (15)	20 (15)	30 (22)

Material Specifications

INDORAYA POWER ENERGI

Part	Pump Construction	Standard Material
Case, head	All	Ductile iron ASTM A536
Flange, rotor, seat adapter plate	All	Ductile iron ASTM A536
Sideplate	All	Gray iron ASTM A48, Class 40
Cam	All	Gray iron ASTM A48, Class 40
Bearing cap	All	Ductile iron ASTM A536
Welding flange	All	Steel
Seal seat	All	Silicon carbide
Seal metal parts	All	Steel
Shaft	All	8620 Steel
Blades	All	Advanced polymer
Relief valve spring	All	Steel cadmium plated
Relief valve	CDBN/HN0521	Steel
	All others	Gray iron ASTM A48,Class 30
Bearing	All	Cylinder roller
O-rings	All	Buna-N (Standard), PTFE, Viton®[1], Neoprene®[1] (optional)
Retainer rings	All	Steel

[1]*Registered trademark of the DuPont company.*

Appendix D—Outline Dimensions for All CP-Series (CPBN) and CD-Series (CDBN) Models with NPT Flanges

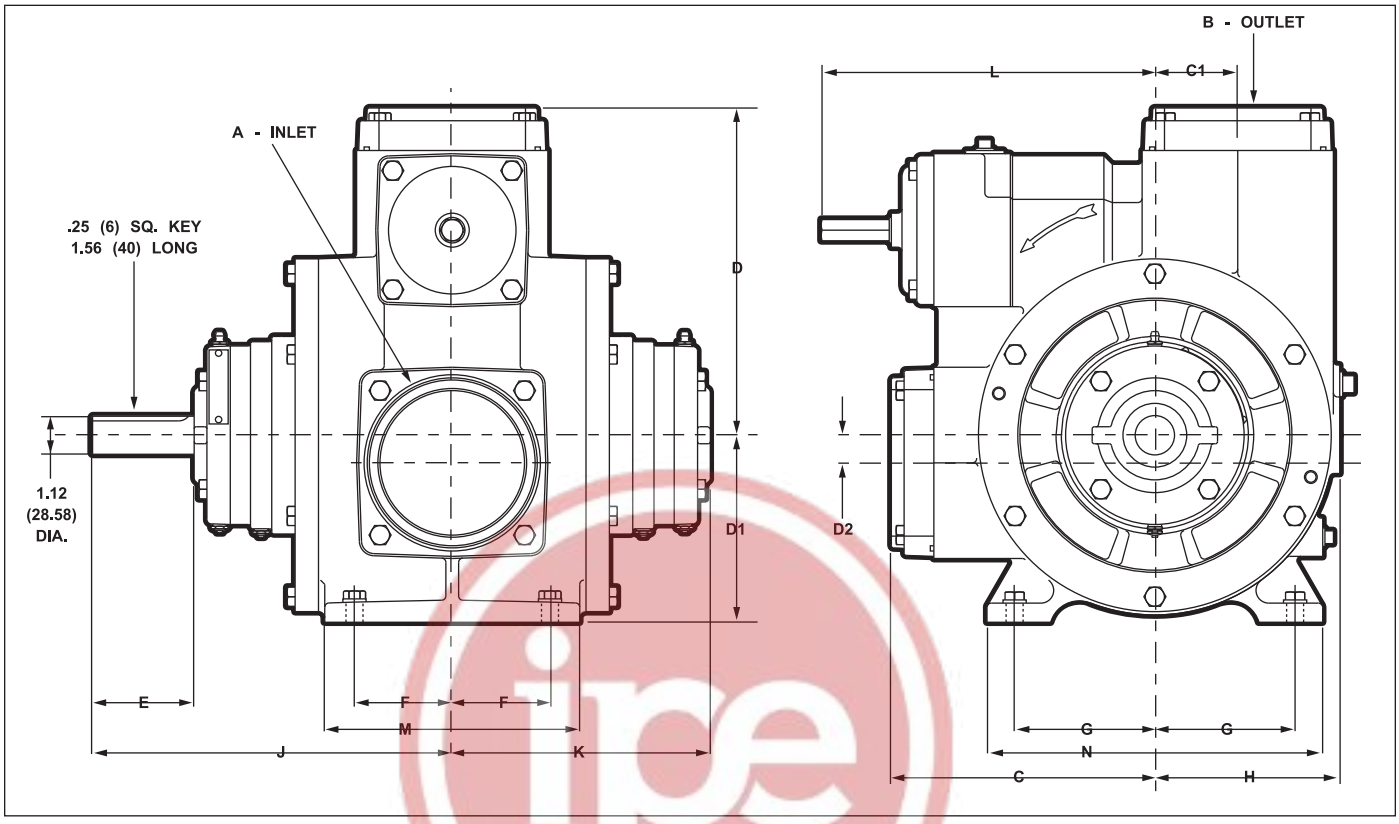

Model	A Inlet	B Outlet	C	C1*	D	D1	D2*	E	F	G	H	J	K	L	M	N
CPBN0521	STD: 2" NPT OPT: 2-1/2" NPT 3" NPT	STD: 2" NPT OPT: 2-1/2" NPT 1-1/2" NPT	6.13 (157)	0 (0)	6.13 (157)	5.00 (127)	0 (0)	2.00 (51)	1.38 (35)	4.00 (102)	4.69 (119)	7.88 (200)	5.88 (149)	7.38 (187)	3.75 (95)	9.00 (229)
CPBN0721	STD: 2-1/2" NPT OPT: 3" NPT	STD: 2-1/2" NPT OPT: 2" NPT 3" NPT	5.62 (143)	1.16 (29)	5.75 (146)	4.56 (116)	0.81 (21)	2.00 (51)	1.50 (38)	3.38 (86)	4.56 (116)	8.69 (221)	6.69 (170)	10.19 (259)	4.50 (114)	8.19 (208)
CPBN1021	STD: 3" NPT OPT: 2-1/2" NPT	STD: 3" NPT OPT: 2" NPT 2-1/2" NPT	6.88 (175)	3.13 (79)	7.63 (194)	5.50 (140)	0 (0)	2.00 (51)	1.75 (44)	4.12 (105)	5.50 (140)	8.44 (214)	6.44 (164)	8.88 (225)	5.25 (133)	9.88 (251)
CPBN1321	STD: 4" NPT	STD: 3" NPT OPT: 4" NPT	7.75 (197)	2.44 (62)	9.62 (244)	5.50 (140)	0.81 (21)	3.00 (76)	2.88 (73)	4.12 (105)	5.38 (137)	10.62 (270)	7.62 (194)	9.38 (238)	7.50 (191)	9.88 (251)
CPBN1521	STD: 4" NPT	STD: 4" NPT OPT: 3" NPT	7.75 (197)	2.44 (62)	9.62 (244)	5.50 (140)	0.81 (21)	3.00 (76)	2.88 (73)	4.12 (105)	5.38 (137)	10.62 (270)	7.62 (194)	9.38 (238)	7.50 (191)	9.88 (251)
CDBN0521	STD: 2" NPT OPT: 2-1/2" NPT	STD: 2" NPT OPT: 2-1/2" NPT 1-1/2" NPT	6.13 (157)	0 (0)	6.13 (157)	5.00 (127)	0 (0)	2.00 (51)	1.38 (35)	4.00 (102)	4.69 (119)	7.88 (200)	5.88 (149)	7.38 (187)	3.75 (95)	9.00 (229)
CDBN1021	STD: 3" NPT OPT: 4" NPT	STD: 3" NPT OPT: 4" NPT	7.06 (179)	0 (0)	7.19 (183)	5.50 (140)	0 (0)	2.00 (51)	1.75 (44)	4.12 (105)	5.38 (137)	8.50 (216)	6.50 (165)	11.25 (286)	5.25 (133)	9.88 (251)
CDBN1321	STD: 4" NPT	STD: 3" NPT OPT: 4" NPT	7.75 (197)	2.44 (62)	9.62 (244)	5.50 (140)	0.81 (21)	3.00 (76)	2.88 (73)	4.12 (105)	5.38 (137)	10.62 (270)	7.62 (194)	9.38 (238)	7.50 (191)	9.88 (251)
CDBN1521	STD: 4" NPT	STD: 4" NPT OPT: 3" NPT	7.75 (197)	2.44 (62)	9.62 (244)	5.50 (140)	0.81 (21)	3.00 (76)	2.88 (73)	4.12 (105)	5.38 (137)	10.62 (270)	7.62 (194)	9.81 (249)	7.50 (191)	9.88 (251)

All dimensions are in inches (centimeters).

INDAYA POWER ENERGI

Appendix C—Performance Curves
for All Mechanically Sealed Models 1521/22

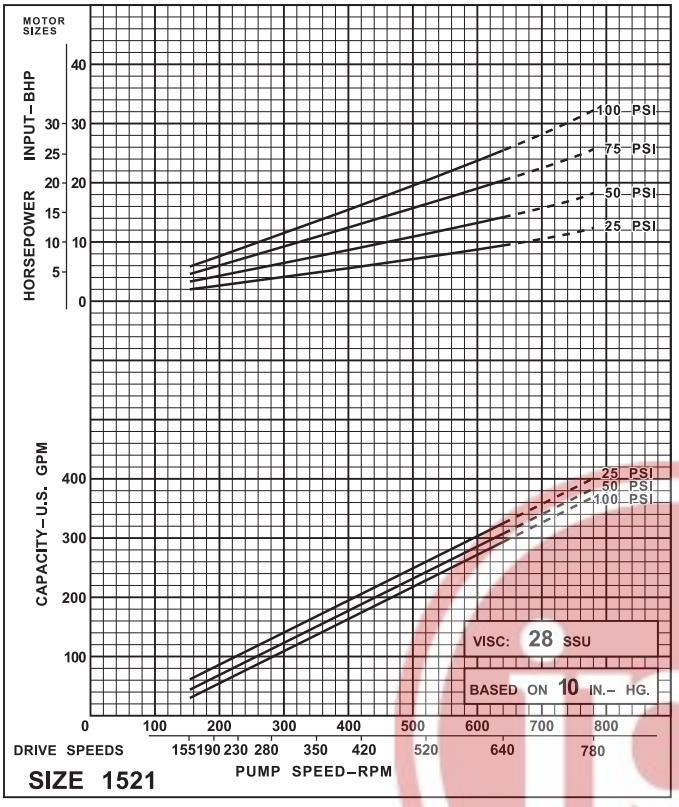

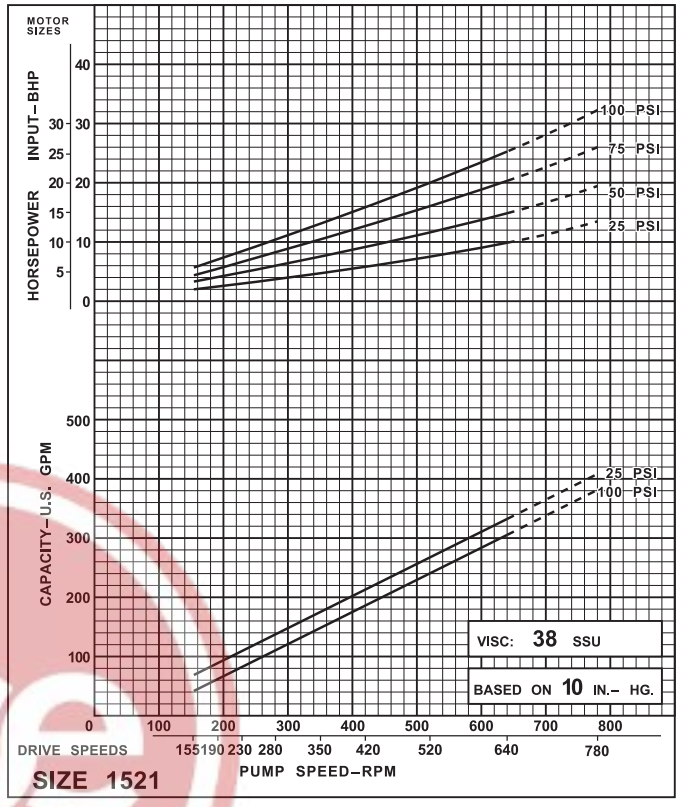

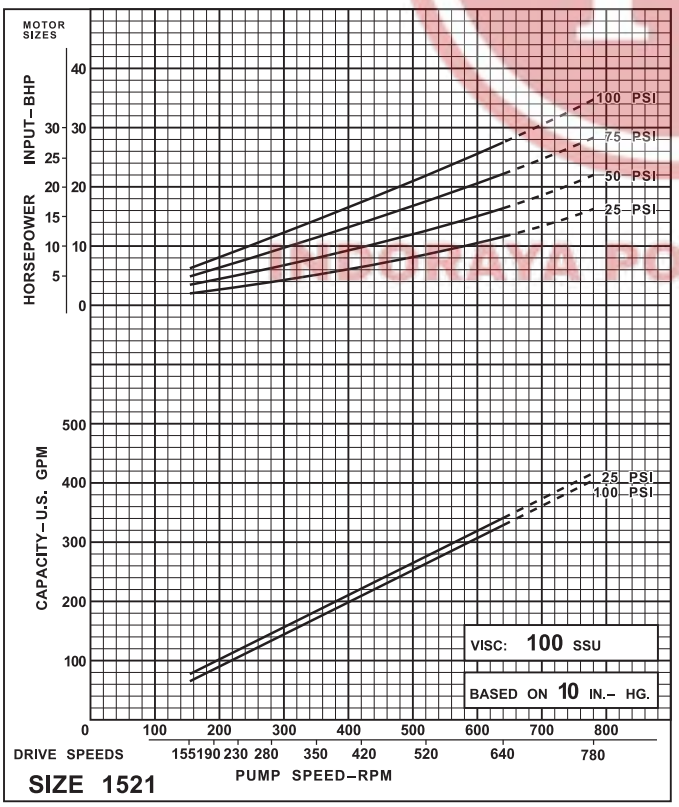

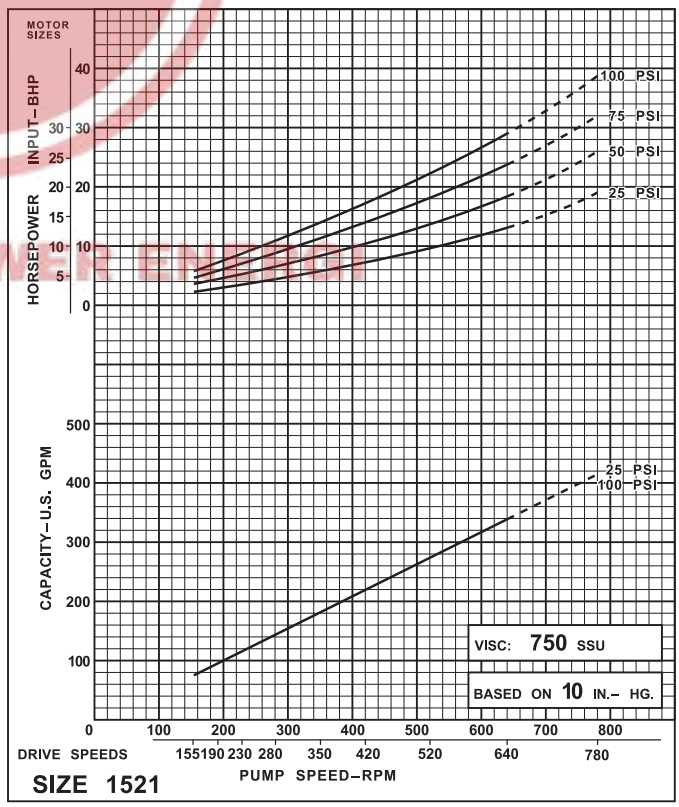

PUSPAKAYA POWER ENTERPRISE

Appendix C—Viscosity Performance Curves for All Coro-Vane® Industrial Pumps

The graph below provides recommendations for maximum pump speed when operating at elevated viscosities. Use this as a guideline when determining the pump speed for your application. Currently our published performance curves stop at just under 1,000 SSU. For applications in which the liquid exceeds this viscosity, please contact your local distributor or call our factory.

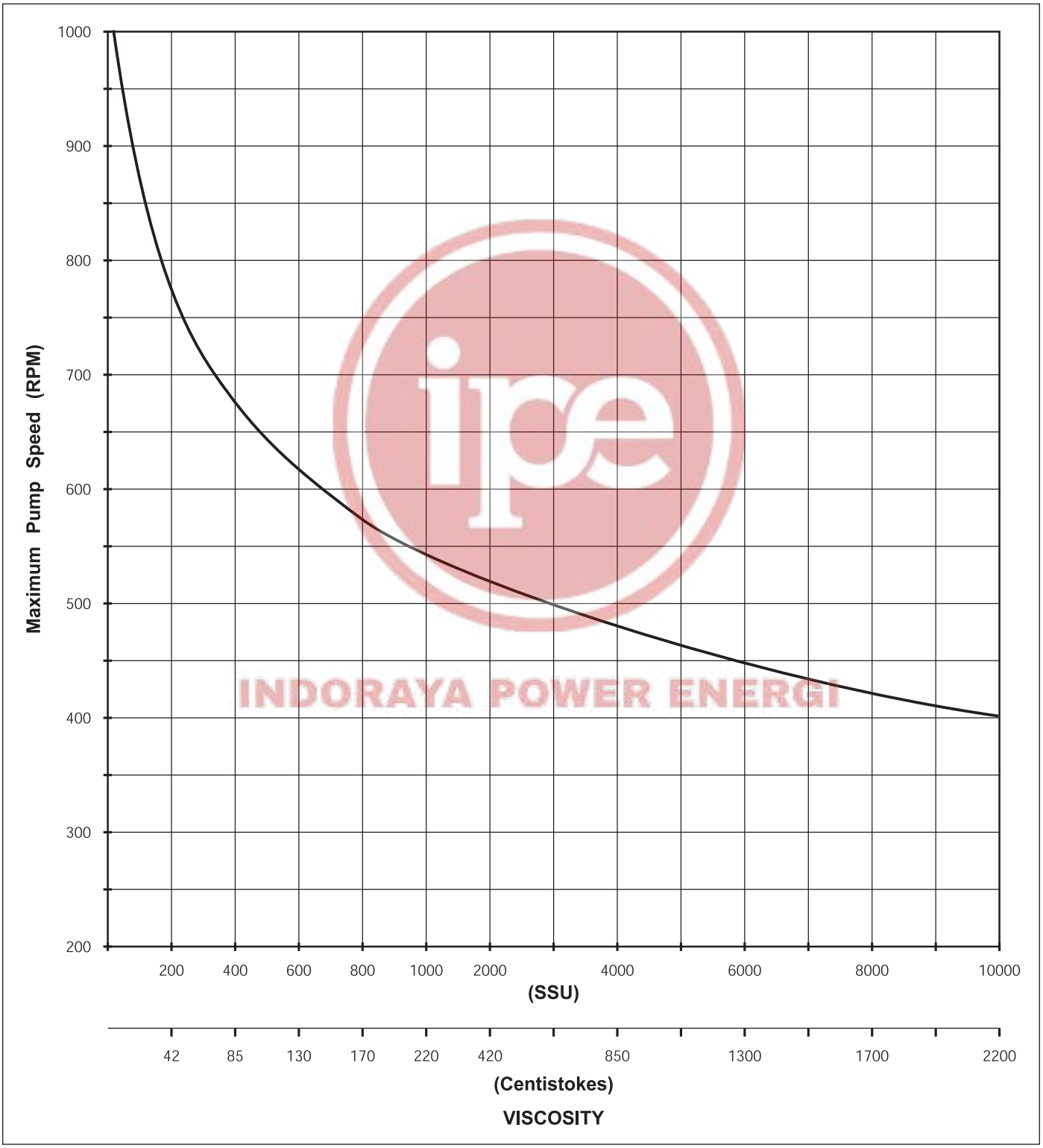

INDORAYA POWER ENERGI

Appendix E—Parts Details for Stationary and Truck Pumps

Stationary Models CPBN/BF 1321, 1521, and CDBN/BF 1321, 1521

Truck Models CPBN/BF 1322, 1522, and CDBN/BF 1322, 1522

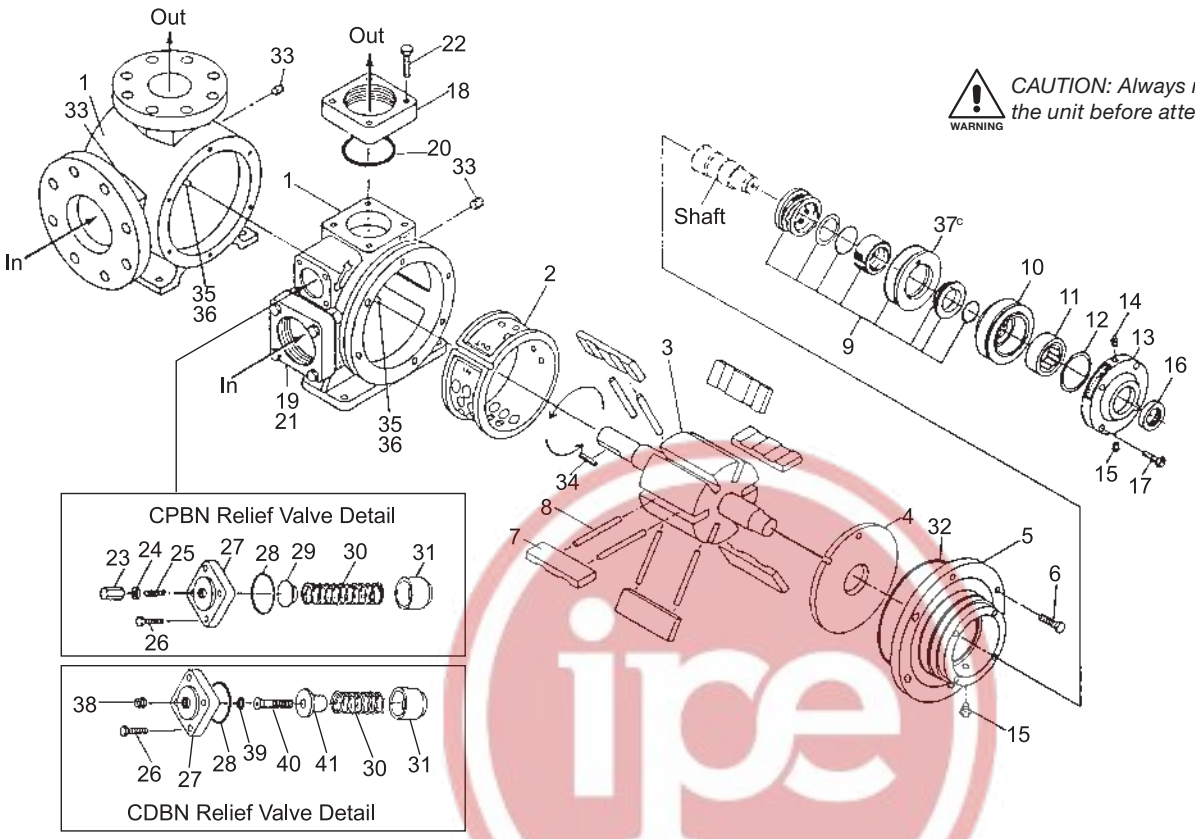

CAUTION: Always relieve pressure in the unit before attempting any repairs.

Material Code	
A	Buna-N
B	Neoprene®b
D	Viton®b
E	PTFE

Ref No.	Part No.	Description	Qty.
1.	3254	Casing (CPBN and CDBN)	1
	2437	Casing (CPBF and CDBF)	1
2.	1792-1	Liner (1521 and 1522)	1
	4072	Liner (1321 and 1322)	1
3.	3350-X3R	Rotor and shaft assembly (1321 and 1521)	1
	3350-X4R	Rotor and shaft assembly (1322 and 1522)	1
4.	3935	Side plate	2
5.	1205-5	Head (CPBN and CPBF)	2
	1205-4	Head (CDBN and CDBF)	2
6.	7001-037NC125A	Bolt for head 3/8"—16 NC x 1-1/4" (CPBN)	12
	7001-037NC125A	Bolt for head 3/8"—16 NC x 1-1/4" (CDBN)	24
7.	3309	Vane	6
8.	4028-X	Push rod (1521 and 1522)	6
	4083-X	Push rod (1321 and 1322)	6
9.	1769-XR_6[a]	Seal assembly (field replacement)	2
10.	1769	Bearing housing	2
11.	2754	Bearing outer race	2
12.	2760-244	Retainer ring	2
13.	1164-1	Bearing cap	2
14.	2158	Grease zerk—1/8" NPT	2
15.	1343	Relief fitting—1/8" NPT	4
16.	1358	Grease seal	2
17.	7001-037NC125A	Bolt for bearing cap 3/8"—16 NC x 1-1/4"	8
18.	1206-3	Flange—3" NPT CPBN/CDBN 1321 outlet standard	1

Ref No.	Part No.	Description	Qty.
19.	1206-4	Flange—4" NPT CPBN/CDBN (1321 inlet) (1521 inlet and outlet) std.	1
20.	2-245_[a]	O-ring gasket for 1206-3 flange	1
21.	2-249_[a]	O-ring gasket for 1206-4 flange	1
22.	7001-037NC150A	Bolt for flange 3/8"—16 NC x 1-1/2"	8
23.	4025	Adjusting screw cap (CPBN)	1
24.	1480	Gasket (CPBN)	1
25.	7006-043NC250A	Relief valve soc. hd. adj. screw 7/16"—14 NCx2-1/2" (CPBN)	1
26.	7001-037NC100A	Bolt for relief valve cover 3/8"—16 NC x 1"	4
27.	4061-1	Relief valve cap (CPBN)	1
	4061	Relief valve cap (CDBN)	1
28.	2-240_[a]	Relief valve cap O-ring	1
29.	4074	Relief valve spring seat (CPBN)	1
30.	4075	Relief valve spring	1
31.	4062	Relief valve poppet	1
32.	2-268_[a]	Casing O-ring	2
33.	3442	Pipe plug—1/4" NPT	2
34.	2270	Shaft key—1/4"	1
35.	1309	Liner key	1
36.	3253	Liner key pin—3/8" x 1/2"	2
37.	1822[c]	Seal adaptor plate	2
38.	2590	Flush plug—1/8" NPT (CDBN)	1
39.	2-112_[a]	O-ring (CDBN)	1
40.	4078	Relief valve adjustment screw (CDBN)	1
41.	4073	Relief valve spring seat (CDBN)	1

[a] _ denotes material code. See material code chart for details.
[b] Registered trademark of the DuPont company.
[c] Not included in field replacement seal assembly.

ipe INDORAYA POWER ENGINE