Appendix B—Specifications for All CD-Series (high pressure) Models

Operating Specifications for All CD-Series Models with NPT Flanges

Model	0521/22	1021/22	1321/22	1521/22
Suction flange	2"	3"	4"	4"
Discharge flange	2"	3"	3"	4"
Maximum RPM	950	950	860	860
Minimum temperature	-25°F (-32°C)			
Maximum temperature	225°F (107°C)			
Maximum working pressure	400 psig (27.6 bar)			
Maximum differential pressure	125 psid (8.6 bar)	125 psid (8.6 bar)	100 psid (6.9 bar)	100 psid (6.9 bar)
Suction flange option	2½", 3"	2½"	No	No
Discharge flange option	2½"	2½"	4"	3"
Internal relief	Yes			
Seal seat material options	Silicon carbide			
Steel slip-on flange option	Yes (suction & discharge)			
Maximum driver hp (kW)	10 (7.5)	20 (15)	20 (15)	30 (22)

Operating Specifications for All CD-Series Models with ANSI Flanges

Model	1021/22	1321/22	1521/22
Suction flange	3" 300 lb ANSI	4" 300 lb ANSI	4" 300 lb ANSI
Discharge flange	2-1/2" 300 lb ANSI	3" 300 lb ANSI	3" 300 lb ANSI
Maximum RPM	950	860	860
Minimum temperature	-25°F (-32°C)	-25°F (-32°C)	-25°F (-32°C)
Maximum temperature	225°F (107°C)	225°F (107°C)	225°F (107°C)
Maximum working pressure	400 psig (27.6 bar)	400 psig (27.6 bar)	400 psig (27.6 bar)
Maximum differential pressure	125 psid (8.6 bar)	125 psid (8.6 bar)	100 psid (6.9 bar)
Suction or discharge flange option	No		
Internal relief	No		
Seal seat material options	Silicon carbide		
Maximum driver hp (kW)	20 (15)	20 (15)	30 (22)

Material Specifications

INDORAYA POWER ENERGI

Part	Pump Construction	Standard Material
Case, head	All	Ductile iron ASTM A536
Flange, rotor, seat adapter plate	All	Ductile iron ASTM A536
Sideplate	All	Gray iron ASTM A48, Class 40
Cam	All	Gray iron ASTM A48, Class 40
Bearing cap	All	Ductile iron ASTM A536
Welding flange	All	Steel
Seal seat	All	Silicon carbide
Seal metal parts	All	Steel
Shaft	All	8620 Steel
Blades	All	Advanced polymer
Relief valve spring	All	Steel cadmium plated
Relief valve	CDBN/HN0521	Steel
	All others	Gray iron ASTM A48,Class 30
Bearing	All	Cylinder roller
O-rings	All	Buna-N (Standard), PTFE, Viton®[1], Neoprene®[1] (optional)
Retainer rings	All	Steel

[1]*Registered trademark of the DuPont company.*

Appendix D—Outline Dimensions for All CP-Series (CPBN) and CD-Series (CDBN) Models with NPT Flanges

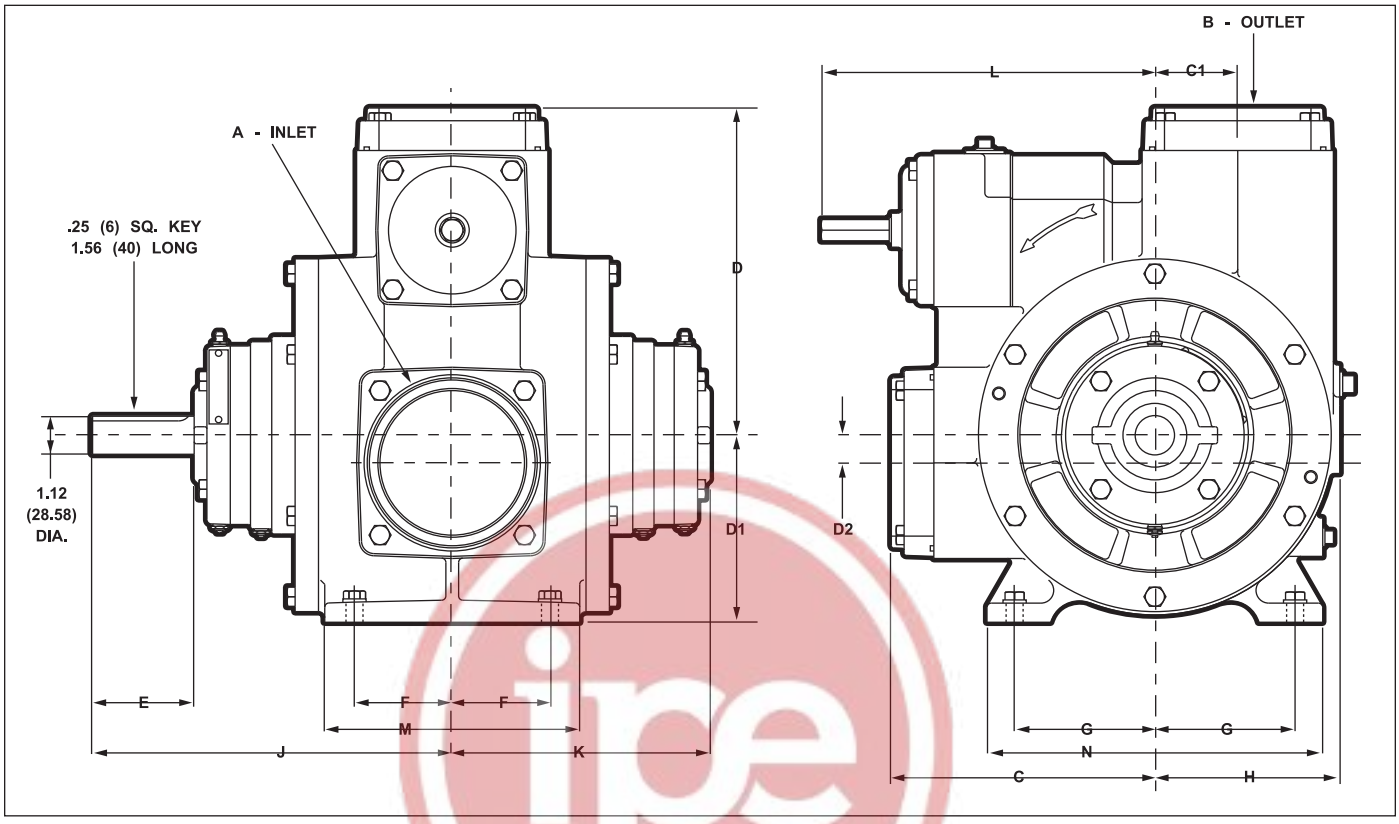

Model	A Inlet	B Outlet	C	C1*	D	D1	D2*	E	F	G	H	J	K	L	M	N
CPBN0521	STD: 2" NPT OPT: 2-1/2" NPT 3" NPT	STD: 2" NPT OPT: 2-1/2" NPT 1-1/2" NPT	6.13 (157)	0 (0)	6.13 (157)	5.00 (127)	0 (0)	2.00 (51)	1.38 (35)	4.00 (102)	4.69 (119)	7.88 (200)	5.88 (149)	7.38 (187)	3.75 (95)	9.00 (229)
CPBN0721	STD: 2-1/2" NPT OPT: 3" NPT	STD: 2-1/2" NPT OPT: 2" NPT 3" NPT	5.62 (143)	1.16 (29)	5.75 (146)	4.56 (116)	0.81 (21)	2.00 (51)	1.50 (38)	3.38 (86)	4.56 (116)	8.69 (221)	6.69 (170)	10.19 (259)	4.50 (114)	8.19 (208)
CPBN1021	STD: 3" NPT OPT: 2-1/2" NPT	STD: 3" NPT OPT: 2" NPT 2-1/2" NPT	6.88 (175)	3.13 (79)	7.63 (194)	5.50 (140)	0 (0)	2.00 (51)	1.75 (44)	4.12 (105)	5.50 (140)	8.44 (214)	6.44 (164)	8.88 (225)	5.25 (133)	9.88 (251)
CPBN1321	STD: 4" NPT	STD: 3" NPT OPT: 4" NPT	7.75 (197)	2.44 (62)	9.62 (244)	5.50 (140)	0.81 (21)	3.00 (76)	2.88 (73)	4.12 (105)	5.38 (137)	10.62 (270)	7.62 (194)	9.38 (238)	7.50 (191)	9.88 (251)
CPBN1521	STD: 4" NPT	STD: 4" NPT OPT: 3" NPT	7.75 (197)	2.44 (62)	9.62 (244)	5.50 (140)	0.81 (21)	3.00 (76)	2.88 (73)	4.12 (105)	5.38 (137)	10.62 (270)	7.62 (194)	9.38 (238)	7.50 (191)	9.88 (251)
CDBN0521	STD: 2" NPT OPT: 2-1/2" NPT	STD: 2" NPT OPT: 2-1/2" NPT 1-1/2" NPT	6.13 (157)	0 (0)	6.13 (157)	5.00 (127)	0 (0)	2.00 (51)	1.38 (35)	4.00 (102)	4.69 (119)	7.88 (200)	5.88 (149)	7.38 (187)	3.75 (95)	9.00 (229)
CDBN1021	STD: 3" NPT OPT: 4" NPT	STD: 3" NPT OPT: 4" NPT	7.06 (179)	0 (0)	7.19 (183)	5.50 (140)	0 (0)	2.00 (51)	1.75 (44)	4.12 (105)	5.38 (137)	8.50 (216)	6.50 (165)	11.25 (286)	5.25 (133)	9.88 (251)
CDBN1321	STD: 4" NPT	STD: 3" NPT OPT: 4" NPT	7.75 (197)	2.44 (62)	9.62 (244)	5.50 (140)	0.81 (21)	3.00 (76)	2.88 (73)	4.12 (105)	5.38 (137)	10.62 (270)	7.62 (194)	9.38 (238)	7.50 (191)	9.88 (251)
CDBN1521	STD: 4" NPT	STD: 4" NPT OPT: 3" NPT	7.75 (197)	2.44 (62)	9.62 (244)	5.50 (140)	0.81 (21)	3.00 (76)	2.88 (73)	4.12 (105)	5.38 (137)	10.62 (270)	7.62 (194)	9.81 (249)	7.50 (191)	9.88 (251)

All dimensions are in inches (centimeters).

MINORAYA POWER ENERGI

Appendix C—Viscosity Performance Curves for All Coro-Vane® Industrial Pumps

The graph below provides recommendations for maximum pump speed when operating at elevated viscosities. Use this as a guideline when determining the pump speed for your application. Currently our published performance curves stop at just under 1,000 SSU. For applications in which the liquid exceeds this viscosity, please contact your local distributor or call our factory.

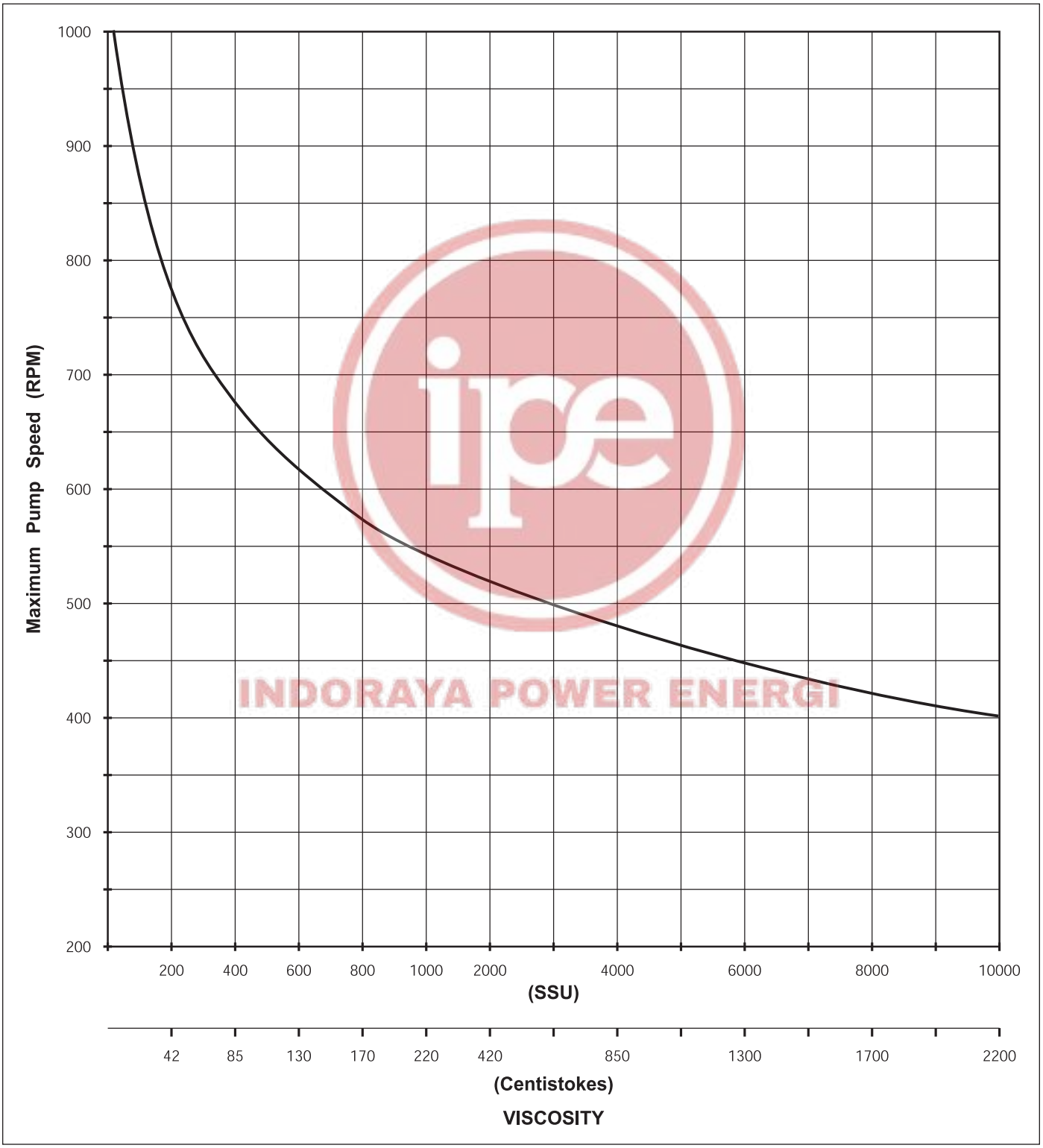

INDORAYA POWER ENERGI

Appendix C—Performance Curves for All Mechanically Sealed Models 1021/22

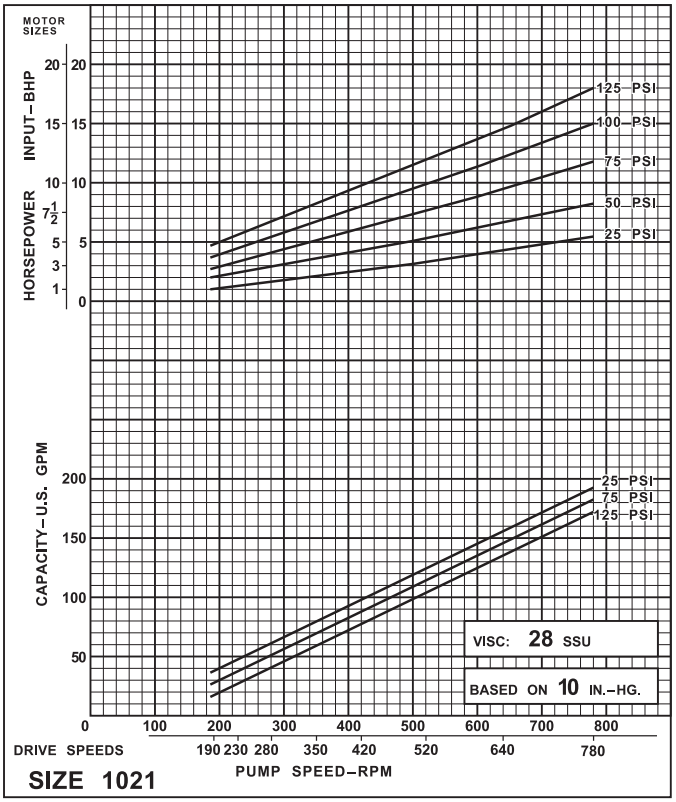

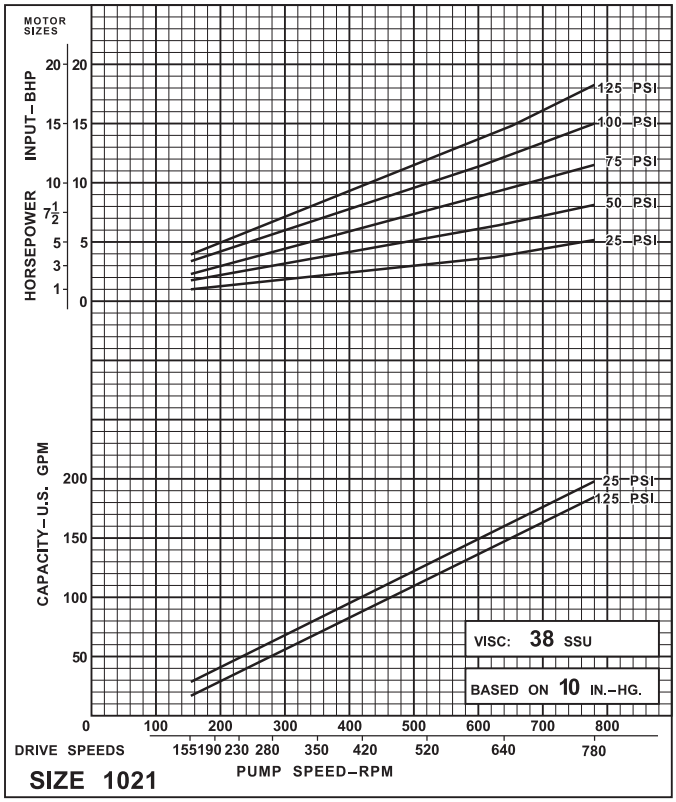

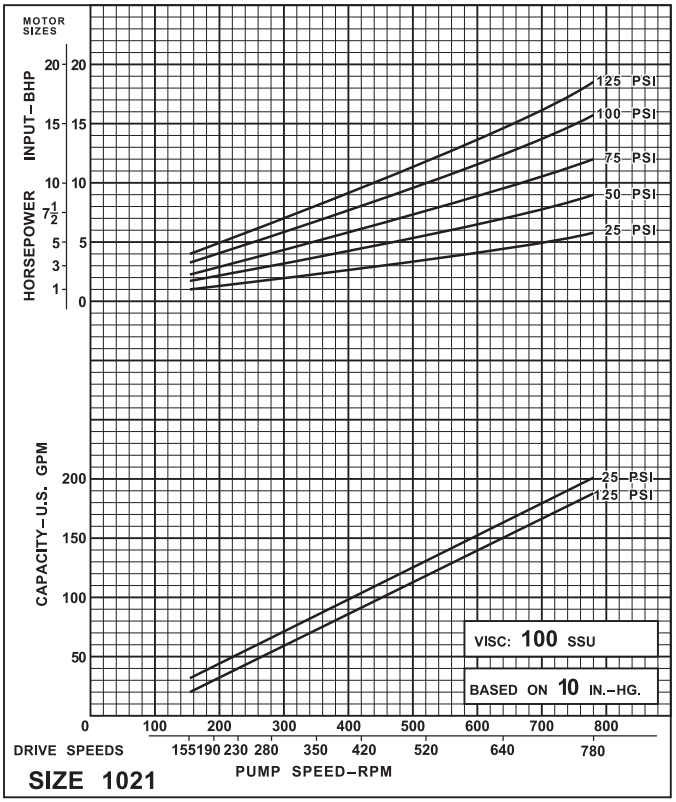

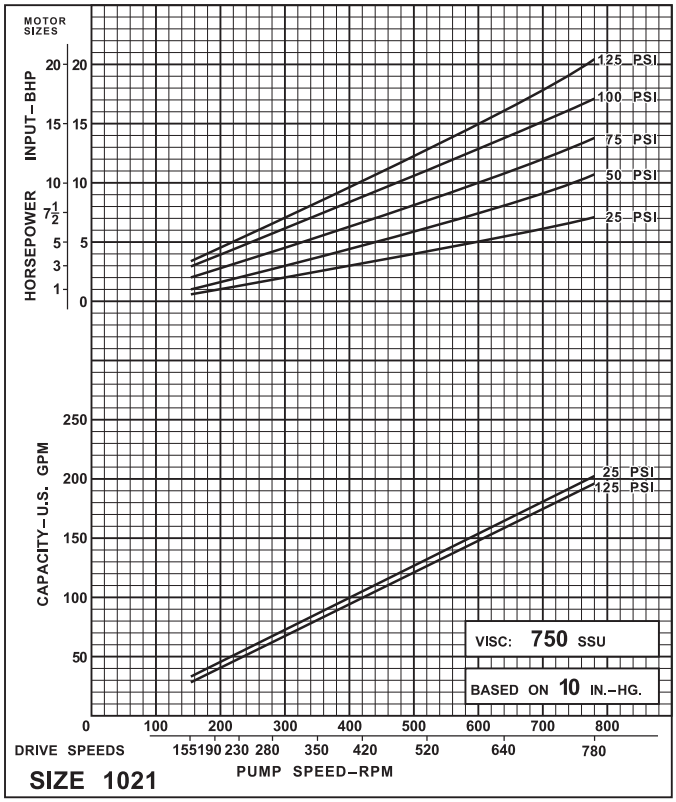

Appendix E—Parts Details for Stationary and Truck Pumps

Stationary Models CPBN/BF 1021 and CDBN/BF 1021

Truck Models CPBN/BF 1022 and CDBN/BF 1022

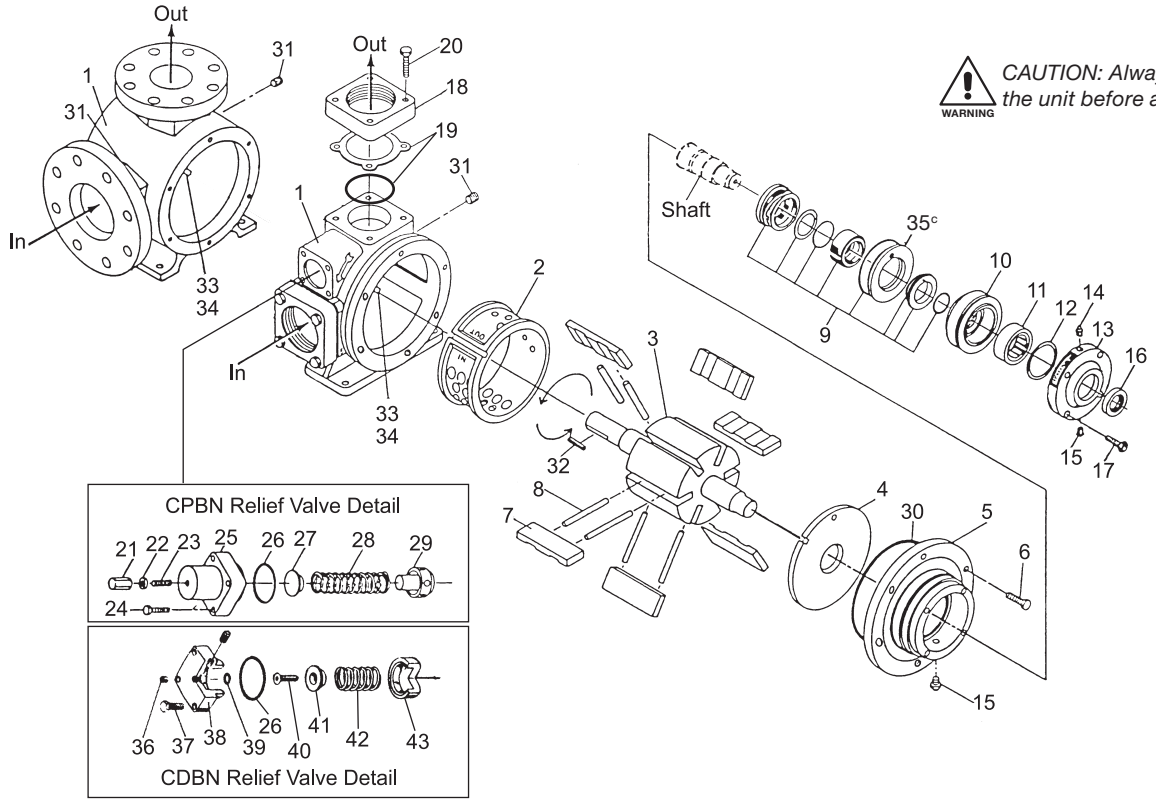

CAUTION: Always relieve pressure in the unit before attempting any repairs.

Material Code	
A	Buna-N
B	Neoprene®[b]
D	Viton®[b]
E	PTFE

Ref No.	Part No.	Description	Qty.
1.	4145	Casing (CPBN)	1
	2841	Casing (CDBN)	1
	2433	Casing (CPBF and CDBF)	1
2.	1201-2	Liner	1
3.	1208-1X5R	Rotor and shaft assembly (1021)	1
	1208-1X6R	Rotor and shaft assembly (1022)	1
4.	3935	Side plate	2
5.	1205-5	Head (CPBN)	2
	1205-4	Head (CDBN)	2
6.	7001-037NC125A	Bolt for head 3/8"—16 NC x 1-1/4" (CPBN)	12
	7001-037NC125A	Bolt for head 3/8"—16 NC x 1-1/4" (CDBN)	24
7.	3936	Vane	6
8.	2708-X	Push rod	6
9.	1769-XR_6[a]	Seal assembly (field replacement)	2
10.	1769	Bearing housing	2
11.	2754-X	Roller bearing	2
12.	2760-244	Spiral retainer ring	2
13.	1164-1	Bearing cap	2
14.	2158	Grease zerk—1/8" NPT	2
15.	1343	Relief fitting—1/8" NPT	4
16.	1358	Grease seal	2
17.	7001-037NC125A	Bolt for bearing cap 3/8"—16 NC x 1-1/4"	8
18.	1172-2	Flange—2" NPT, optional (CPBN outlet)	2
	1172-2.5	Flange—2-1/2" NPT, optional (CPBN outlet)	2
	1172-3	Flange—3" NPT, standard (CPBN inlet and outlet)	2
	1206-3	Flange—3" NPT, standard (CDBN inlet and outlet)	2
	1206-3S	Flange—3" Weld, optional (CDBN outlet)	2
	1206-4	Flange—4" NPT, optional (CDBN outlet)	2
	1206-4S	Flange—4" Weld, optional (CDBN outlet)	2

Ref No.	Part No.	Description	Qty.
19.	1999	Gasket for 1172 flange (CPBN)	2
	2-245_[a]	O-ring for CDBN	2
20.	7001-037NC175A	Bolt for flange 3/8"—16 NC x 1-3/4"	8
21.	4025	Adjusting screw cap (CPBN)	1
22.	1480	Relief valve adjusting screw gasket (CPBN)	1
23.	7006-043NC250A	Relief valve socket head adjustment screw 7/16"—14 NC x 2-1/2" (CPBN)	1
24.	7001-037NC175A	Bolt for relief valve cover 3/8"—16 NC x 1-3/4" (CPBN)	4
25.	4061-1	Relief valve cover (CPBN)	1
26.	2-228_[a]	Relief valve cap O-ring	1
27.	4074	Relief valve spring seat (CPBN)	1
28.	4149	Relief valve spring (CPBN)	1
29.	4146	Relief valve poppet (CPBN)	1
30.	2-268_[a]	Casing O-ring	2
31.	3442	Pipe plug—1/4" NPT	2
32.	2270	Shaft key—1/4"	1
33.	1309	Liner key	1
34.	3253	Liner key pin—3/8" x 1/2"	2
35.	1822[c]	Adaptor plate	2
36.	2590	Flush plug—1/8" NPT (CDBN)	1
37.	7001-037NC125A	3-8/16" x 1-1/4" hex head (CDBN)	4
38.	1207	Relief valve cap (CDBN)	1
39.	2-112_[a]	O-ring for adjusting screw	1
40.	2252	Relief valve adjustment screw (CDBN)	1
41.	1227	Relief valve guide (CDBN)	1
42.	1226	Relief valve spring (CDBN)	1
43.	1224	Relief valve (CDBN)	1

[a] *_ denotes material code. See material code chart for details.*
[b] *Registered trademark of the DuPont company.*
[c] *Not included in field replacement seal assembly.*